MMC STACKER 15H

Fast. Efficient. Cost-Saving
Loading Solution.

MMC



- Increase Loading Speed
- Reduce Labour dependency
- Handle heavy bags easily
- Smooth & Continuous operation
- Improve Overall productivity

TECH SPECS -

- Chassis - I- Beam (3500 X 1080 X 125) mm
- Conveyor :- 8000 mm
- Belt : PVC Belt, Thk - 5 mm
- Belt Width: 650 mm
- Frame Width - 800 mm
- Mobility : Wheels 12" Extra Heavy Duty with scooty tyre (Manual Maneuverability)
- Power : 4 HP (3 HP - Conveyor,1 HP - Power Pack)
- Electrical : Dual Panel Control (Main + Operator)
- Hydraulic : Single piston On Front Side

FEATURES -

- Stacking Height - 4600 mm (15 Feet)
- Speed - 800 bags / Hour for 50 Kg
- Night Lamps LED's

MMC STACKER 15H

MMC STACKER 15H - DOCKLESS LOADING POSITION

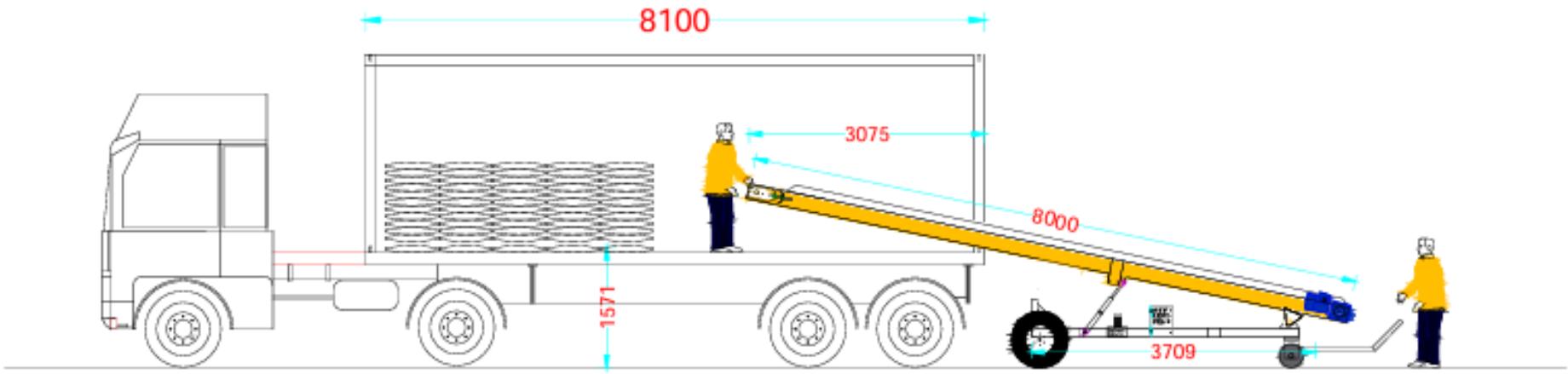

MMC STACKER 15H - DOCK LOADING POSITION

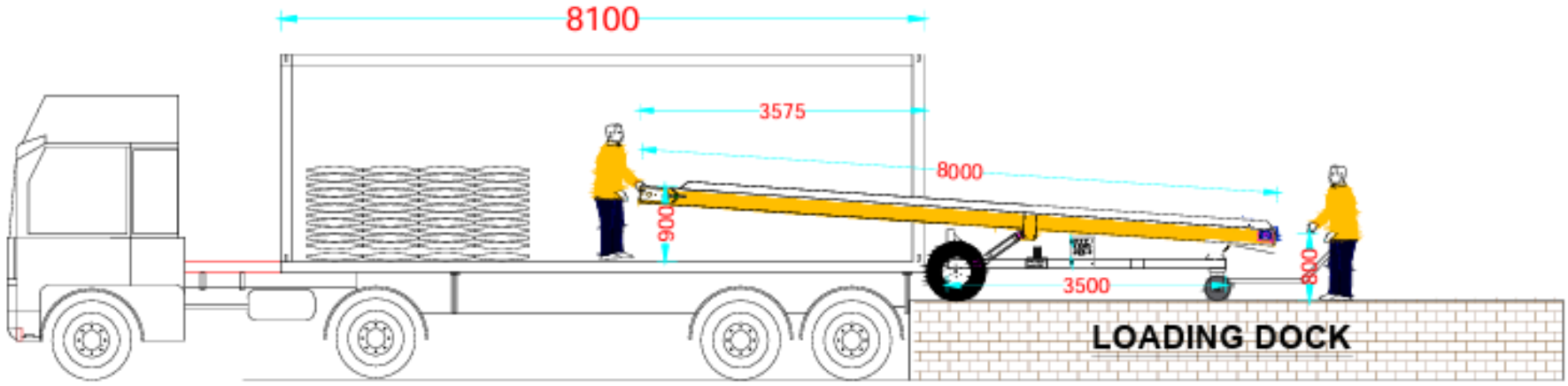

MMC STACKER 15H - STACKING OPEN POSITION - 15FT

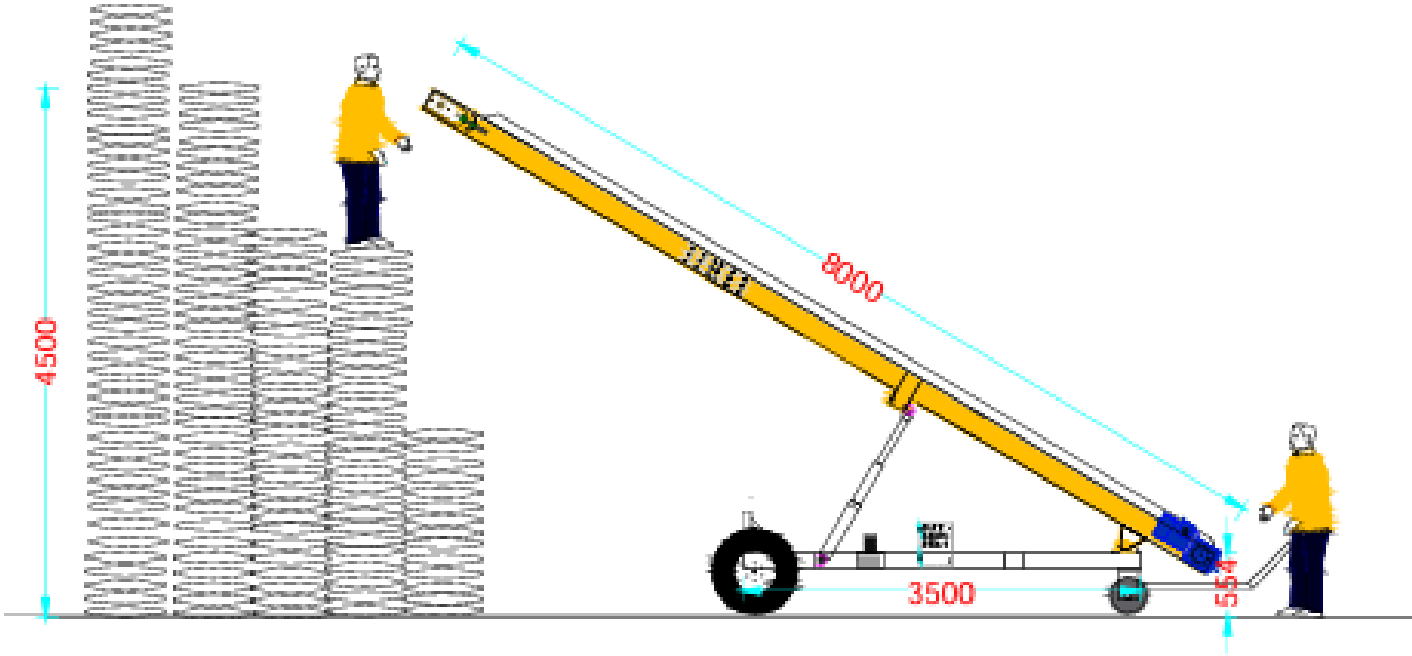

MMC STACKER 15H - STACKING CLOSE POSITION -5FT

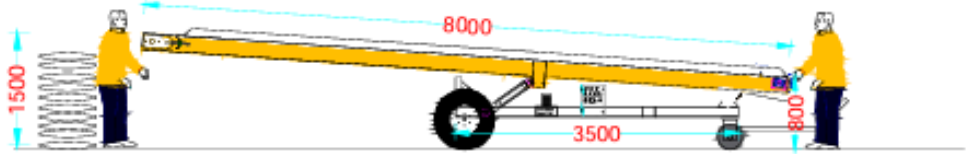

Click here to watch video

MMC Stacker 15H Video

